Date:	Project Name:
Type:	Part Number:

Installation Instructions

RENO-CYDL-MW-DV-MCCT-7-HL

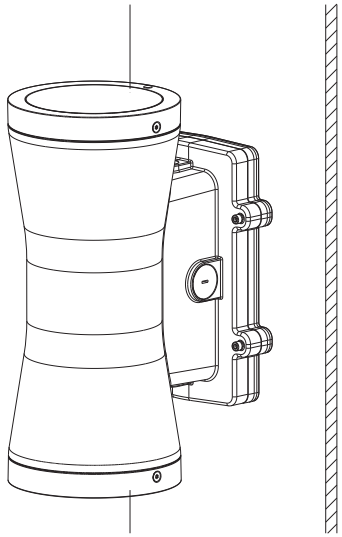

Packing List		
	EVA	1PC
	Screws	4PCS
	Expansion screws	4PCS
	Silicone seals	4PCS
	Waterproof connector	1PC

Physical Dimensions(Unit: mm/inch)

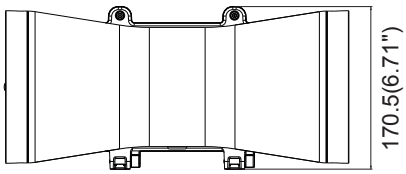

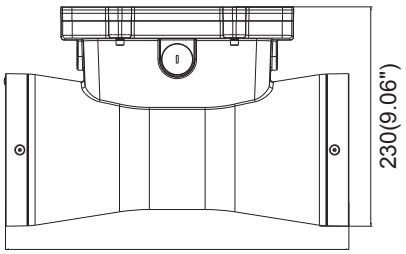

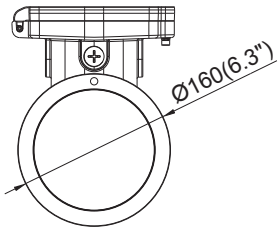

Product Specifications	60W
Input Voltage	120-347 Vac
Power Frequency	50 / 60 Hz
Outlook Dimensions	360x230x170.5mm (14.17"x9.06"x6.71")
Net Weight(±6%)	4.3kg (9.48Lbs)
Working Temperature	-30℃ to + 50℃ (-22℉ to +122℉)
Storing Temperature	-40℃ to +70℃ (-40℉ to +158℉)

*** Please subject to actual product for accurate weight**

Date:	Project Name:
Type:	Part Number:

Installation

1.

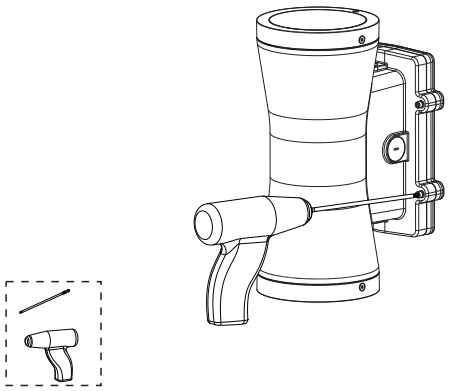

2.

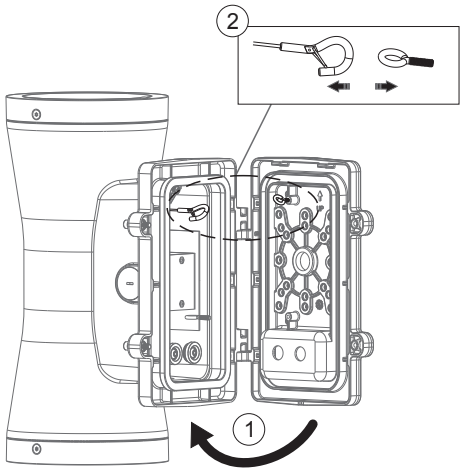

3.

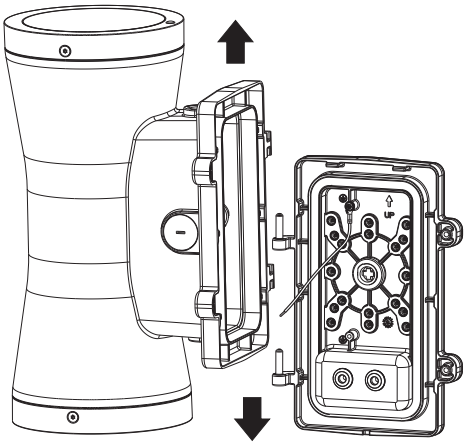

4.

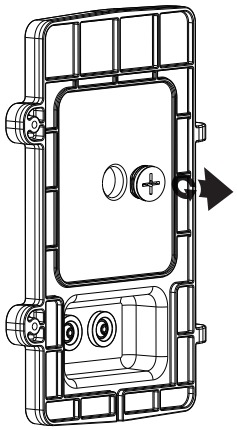

5. **Panel hole size**

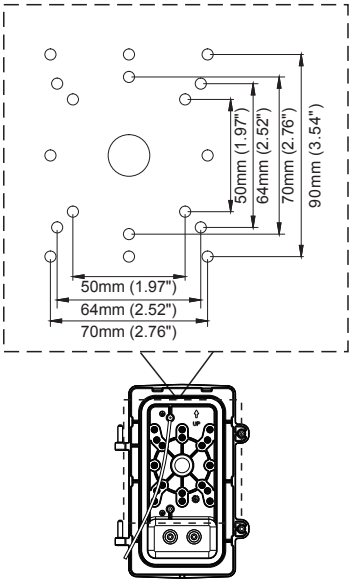

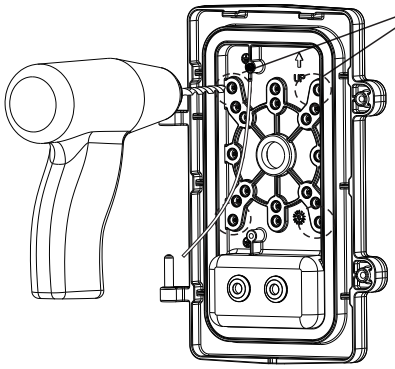

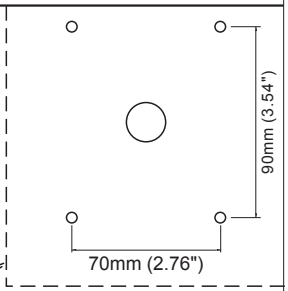

Drilling distance

Date:	Project Name:
Type:	Part Number:

6.

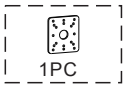

The EVA connected with the back cover.

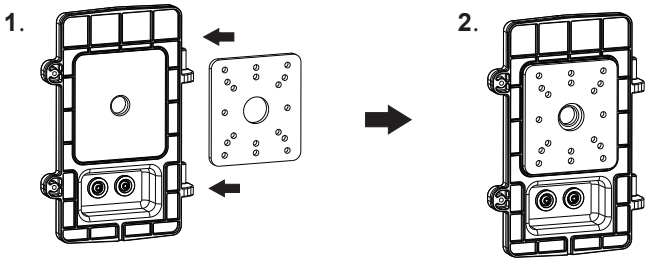

7.

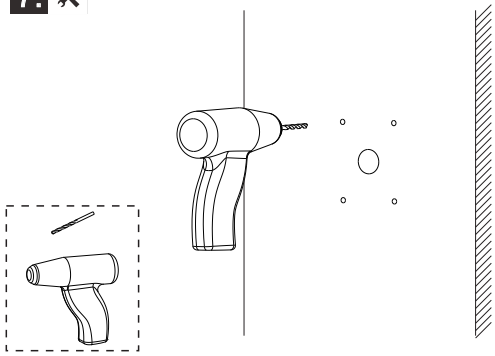

8.

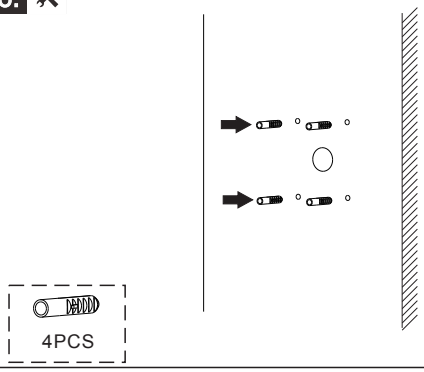

9.

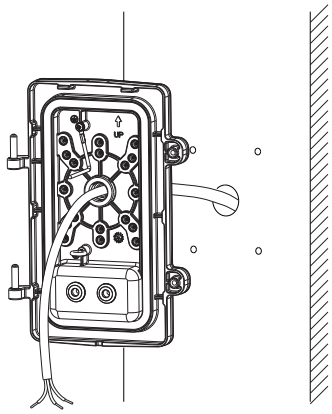

10.

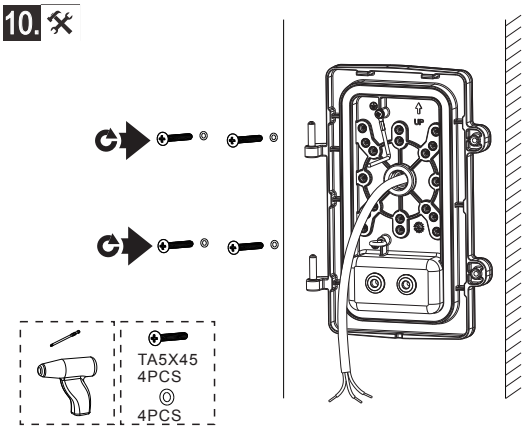

11.

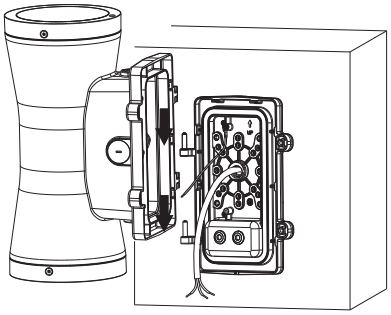

12.

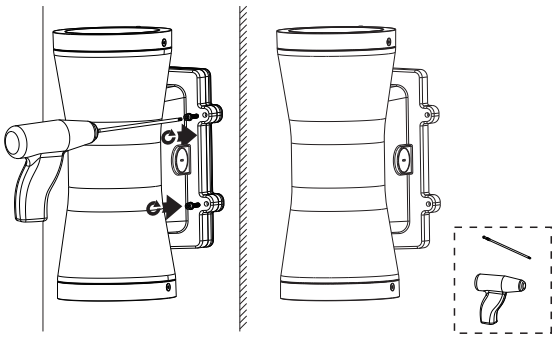

Date:	Project Name:
Type:	Part Number:

13

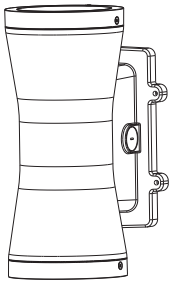

Apply weatherproof silicone sealant around the perimeter of the fixture's mounting base where it meets the wall surface to ensure a watertight seal. This is especially important when mounting the fixture on an uneven wall surface.

Function Switches Guide

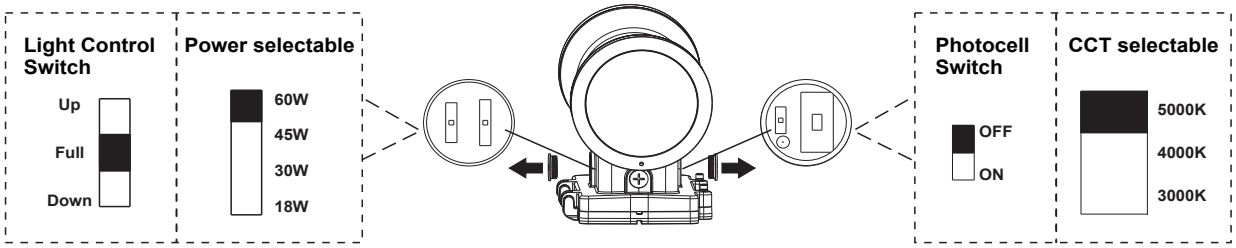

AC cords

L	black
N	white
⏚	green

DIM cords

(+) Dim V purple
(-) Dim V pink

Warning! do not wire dim cord to high voltage, or dim function will fail.

Reminder

We appreciate your purchase!

Please read the entire instruction manual before installation and keep it for future reference.

1. Please do not modify or dismantle the luminaire or replace accessories without confirming with the supplier first.
2. Please authorize only qualified personnel to install the lamp and ensure they follow the instruction manual. Any improper installation might cause falling, electric shock, fire, or other injury, damage or hazard.
3. Please disconnect power before installation or any maintenance of the lamp. Do not touch the power supply when the lamp is operating.
4. If the luminaire begins to smoke or emit odors, please disconnect power since fire or electric shock may occur. And ask qualified person to inspect and maintain the luminaire.
5. If the external flexible cable or cord of this luminaire is damaged, it shall be exclusively replaced by the manufacturer or his service agent or a similar qualified person in order to avoid a hazard.
6. The light source contained in this luminaire shall only be replaced by the manufacturer or his service agent or a similar qualified person.
7. We suggest you adding a separate surge protection device in distribution box to extend luminaire lifespan.

Applications

1. The product is designed for building exteriors, courtyard, hotel lobby, conference rooms, corridor and auditoriums to entryways and similar applications. For other special applications, please consult your salesperson to confirm firstly.
2. Too much dust or oil accumulation on PC lens will stop the lighting emit and heat dissipation, it will change lighting distribution, and cause high heat inside to affect LED chips performance. For such environments, we suggest you to clean the luminaire regularly to ensure longer lifespan. Or you need to use product with glass cover and better heat performance instead.
3. The suggested mounting height of the luminaire is less than 9 meters.