

Date: _____ Project: _____

Type: _____ Part #: _____

Helios Series

Slim Body Wraparound Fixture with Sensor

The Helios series embraces a minimalist design while providing a wide array of features making this fixture adaptable to any indoor application. Utilize the colour and wattage selections built into the fixture to create the perfect look. Easy to install and built to last, this series is sure to impress

Product Features

- DLC Premium for the Stairwell and Passageway Luminaires
- Integrated Microwave Sensor
- Factory Default Sensor Settings: Dim to 30% after 5 mins no motion. Remains until Motion Detected
- Remote needed to configure settings outside of factory default range
- Frosted PMMA Lens
- Includes J-Box Coverplate and V-Hangers
- Emergency backup ready
- Damp location suitable
- Operating temperature: -22°F to +122°F (-30°C to +50°C)
- Rated Lifespan: L70 ~100,000 hrs

Specifications

Voltage	120-347V
Wattage Selectable	2ft - 15/20/25/30W 4ft - 30/40/50W
Lengths	2ft & 4ft
Power Factor	>0.9
Selectable CCT	35/40/5000K
CRI	>80
Lumens	Up to 7,023 lm
Beam Angle	120°
Dimming	0-10V
Mounting	Surface, & Suspension
Applications	Commercial, Industrial, Warehouse, Retail Facilities

RENO LIGHTING

All Rights Reserved © Renolighting (905) 604-4666 | sales@renolighting.com | www.renolighting.com

Reno Lighting reserves the right to change this product and related instructions without notice.
Refer to the product page for the latest information.

Specifications – 2FT

Order #	Model	Wattage	Voltage	Lumens	Efficacy	CCT
R38006	RENO-HWR2-DV-MW-MCCT-MS-ECO	15W	120-347V	2,222 lm	148 lm/W	3500K
				2,237 lm	149 lm/W	4000K
				2,257 lm	150 lm/W	5000K
		20W	120-347V	2,903 lm	145 lm/W	3500K
				2,950 lm	147 lm/W	4000K
				2,945 lm	147 lm/W	5000K
		25W	120-347V	3,598 lm	143 lm/W	3500K
				3,708 lm	148 lm/W	4000K
				3,670 lm	146 lm/W	5000K
		30W	120-347V	4,183 lm	139 lm/W	3500K
				4,357 lm	145 lm/W	4000K
				4,293 lm	143 lm/W	5000K

Specifications – 4FT

Order #	Model	Wattage	Voltage	Lumens	Efficacy	CCT
R38012	RENO-HWR4-DV-MW-MCCT-MS-ECO	30W	120-347V	4,183 lm	139 lm/W	3500K
				4,357 lm	145 lm/W	4000K
				4,293 lm	143 lm/W	5000K
		40W	120-347V	5,514 lm	137 lm/W	3500K
				5,697 lm	142 lm/W	4000K
				5,640 lm	141 lm/W	5000K
		50W	120-347V	6,726 lm	134 lm/W	3500K
				7,023 lm	140 lm/W	4000K
				6,905 lm	138 lm/W	5000K

All Rights Reserved © Renolighting (905) 604-4666 | sales@renolighting.com | www.renolighting.com
Reno Lighting reserves the right to change this product and related instructions without notice.
Refer to the product page for the latest information.

DLC Certification

Order #	Model	Application	DLC Premium
R38006	RENO-HWR2-DV-MW-MCCT-MS-ECO	Direct Linear Ambient Luminaires	S-36D8VN
		Stairwell and Passageway	S-8FC6S2
R38012	RENO-HWR4-DV-MW-MCCT-MS-ECO	Low-Bay Luminaires	S-6WMNZ1
		Stairwell and Passageway	S-MMCNFC
		Direct Linear Ambient Luminaires	S-32NS2K

All Rights Reserved © Renolighting (905) 604-4666 | sales@renolighting.com | www.renolighting.com
Reno Lighting reserves the right to change this product and related instructions without notice.
Refer to the product page for the latest information.

Accessories

Mounting



10FT Suspension kits for suspended fixture installation

R39204

RENO-RP

Order #	Model	Description
R39204	RENO-RP	10FT Suspension kits for suspended fixture installation

Emergency Backup

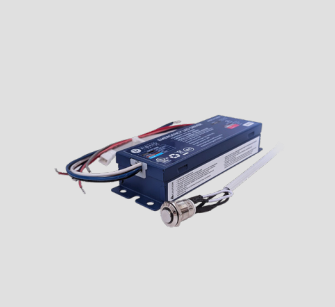

Internal Mount | Lithium | 8W |

R83006

RENO-EM-E08

Order #	Model	Description
R83006	RENO-EM-E08	Internal Mount | Lithium | 8W | 100-347Vac | 7.2V 2600mAh | 50/60Hz | Emergency duration: ≥90mins |

All Rights Reserved © Renolighting (905) 604-4666 | sales@renolighting.com | www.renolighting.com
Reno Lighting reserves the right to change this product and related instructions without notice.
Refer to the product page for the latest information.

Emergency Backup



Remote Control for Standalone Sensors (With Screen)
Note: Only 1 needed per project.
R73002
RENO-REMOTE-H



Remote Control for Standalone sensors (Without Screen)
Note: Only 1 needed per project
R73005
RENO-REMOTE-H-ECO

Order #	Model	Description
R73002	RENO-REMOTE-H	Remote Control for Standalone Sensors (With Screen) Note: Only 1 needed per project
R73005	RENO-REMOTE-H-ECO	Remote Control for Standalone sensors (Without Screen) Note: Only 1 needed per project

All Rights Reserved © Renolighting (905) 604-4666 | sales@renolighting.com | www.renolighting.com
Reno Lighting reserves the right to change this product and related instructions without notice.
Refer to the product page for the latest information.

LUMINOUS INTENSITY DISTRIBUTION (25W 4K) Polar Candela

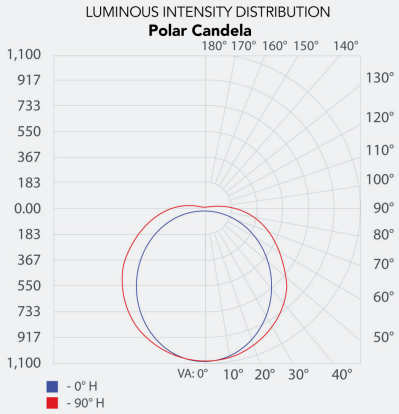

Height	Center Beam (fc)
4.0 ft	67.29 fc
8.0 ft	16.82 fc
12.0 ft	7.48 fc
16.0 ft	4.21 fc
20.0 ft	2.69 fc

Vertical Spread: 102.6°
Horizontal Spread: 127.4°

Beam Width (V/H)
10.0 / 16.2 ft
20.0 / 32.4 ft
30.0 / 48.6 ft
39.9 / 64.8 ft
49.9 / 81.0 ft

LUMINOUS INTENSITY DISTRIBUTION (50W 4K) Polar Candela

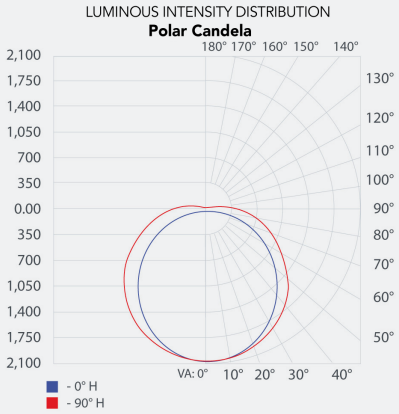

Height	Center Beam (fc)
4.0 ft	128.60 fc
8.0 ft	32.15 fc
12.0 ft	14.29 fc
16.0 ft	8.04 fc
20.0 ft	5.14 fc

Vertical Spread: 103.7°
Horizontal Spread: 127.7°

Beam Width (V/H)
10.2 / 16.3 ft
20.4 / 32.6 ft
30.5 / 48.9 ft
40.7 / 65.2 ft
50.9 / 81.5 ft

RENO LIGHTING

All Rights Reserved © Renolighting (905) 604-4666 | sales@renolighting.com | www.renolighting.com
Reno Lighting reserves the right to change this product and related instructions without notice.
Refer to the product page for the latest information.

Dimensions

Slim Body Wraparound Fixture with Sensor

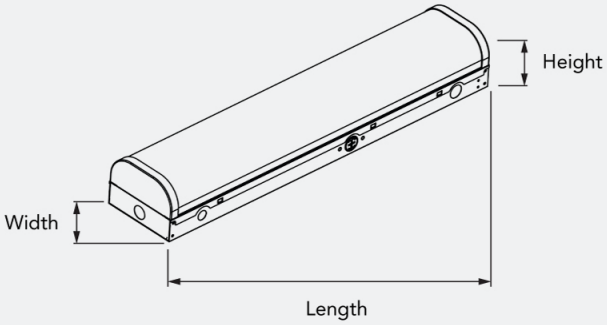

Order #	Size	Length	Width	Height	Weight
R38006	2FT	24in (610 mm)	5.2in (132 mm)	3.8in (97 mm)	3 lbs (1.36 kg)
R38012	4FT	48in (1219 mm)	5.2in (132 mm)	3.8in (97 mm)	5 lbs (2.26 kg)

All Rights Reserved © Renolighting (905) 604-4666 | sales@renolighting.com | www.renolighting.com
Reno Lighting reserves the right to change this product and related instructions without notice.
Refer to the product page for the latest information.