

Date: _____ Project: _____

Type: _____ Part #: _____

Veil Series

LED Gooseneck

Designed to blend classic aesthetic charm with modern performance, the LED Gooseneck features a signature curved arm that delivers targeted, directional illumination. Highly configurable with various finish options, arm profiles, and shade styles, this durable, weather-resistant fixture offers a tailor-made lighting solution engineered to elevate architectural curb appeal and dedicated task areas.

PRIME · UL CERTIFIED · FC · MULTI POWER · MULTI CCT · IP65

Product Features

- 180° Vertical Rotation, 360° Horizontal Rotation
- Built-in photocell sensor
- Includes Straight Shade
  Sold Separately: Angled Cone Shade and Angled Dome Shade
- Multiple Arm Accessories sold Separately
- Compatible with various arm styles to support different installation scenarios and exterior aesthetics.
- Versatile Application Design
- Operating Temperature: -40~45°C (-40~113°F)
- Projected Lifespan (L70): >100,000 Hours
- 5 Year Warranty

Specifications

Input Voltage	120-347V
Selectable Wattage	15/20/25W (Default 25W)
Selectable CCT	27/30/35/40/50K (Default 5,000K)
Power factor	≥0.9
CRI	80
Lumen	3,694 lm
Efficacy	158 lm/W
Beam Angle	110°
Dimming	0-10V
Mounting	Wall Mounted
Applications	Sign lighting, Barn lighting, Porch Lighting, Patio Lighting

All Rights Reserved © Renolighting (905) 604-4666 | sales@renolighting.com | www.renolighting.com
Reno Lighting reserves the right to change this product and related instructions without notice.
Refer to the product page for the latest information.

Specifications - LED Gooseneck

Order #	Model	Voltage	Wattage	Lumen	Efficacy	CCT
R51060	RENO-GN-MW-DV-MCCT-BK	120-347V	15W	2234.6 lm	148.9 lm/W	2,700K
				2276.8 lm	151.7 lm/W	3,000K
				2364.8 lm	157.6 lm/W	3,500K
				2361.7 lm	157.4 lm/W	4,000K
				2371.5 lm	158.0 lm/W	5,000K
			20W	2862.9 lm	143.1 lm/W	2,700K
				2917.9 lm	145.9 lm/W	3,000K
				3024.0 lm	151.2 lm/W	3,500K
				3066.5 lm	153.3 lm/W	4,000K
				3071.4 lm	153.6 lm/W	5,000K
			25W	3423.8 lm	137.0 lm/W	2,700K
				3468.3 lm	138.7 lm/W	3,000K
				3647.5 lm	145.9 lm/W	3,500K
				3667.2 lm	146.7 lm/W	4,000K
				3694.1 lm	147.8 lm/W	5,000K

All Rights Reserved © Renolighting (905) 604-4666 | sales@renolighting.com | www.renolighting.com
Reno Lighting reserves the right to change this product and related instructions without notice.
Refer to the product page for the latest information.

Features Overview

LED Gooseneck



All Rights Reserved © Renolighting (905) 604-4666 | sales@renolighting.com | www.renolighting.com
Reno Lighting reserves the right to change this product and related instructions without notice.
Refer to the product page for the latest information.

Components

LED Gooseneck



All Rights Reserved © Renolighting (905) 604-4666 | sales@renolighting.com | www.renolighting.com
Reno Lighting reserves the right to change this product and related instructions without notice.
Refer to the product page for the latest information.

Accessories

Shades

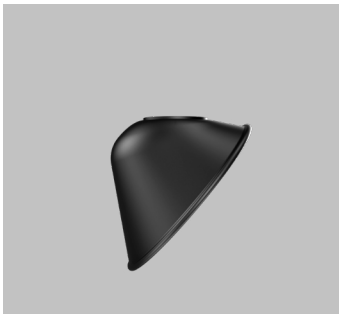

Angled Cone Shade
R59060
Reno-GN-ACS-BK

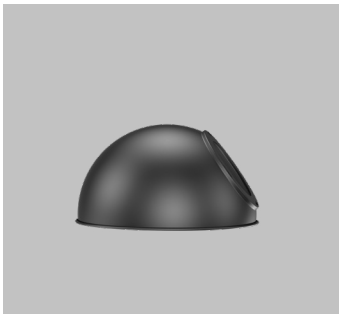

Angled Dome Shade
R59061
Reno-GN-ADS-BK

Order #	Model	Description
R59060	Reno-GN-ACS-BK	Angled Cone Shade for Gooseneck, Black Finish
R59061	Reno-GN-ADS-BK	Angled Dome Shade for Gooseneck, Black Finish

Arms

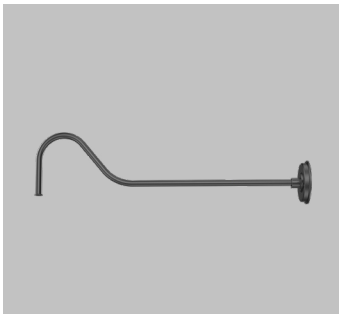

Arm GOOSE2 , Black Finish
R59062
RENO-GN-GOOSE2-BK

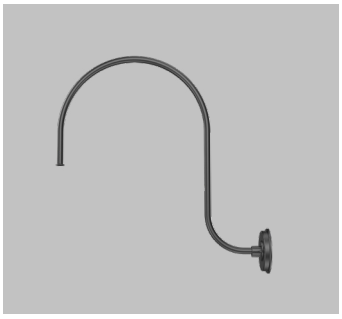

Arm GOOSE3, Black Finish
R59063
RENO-GN-GOOSE3-BK

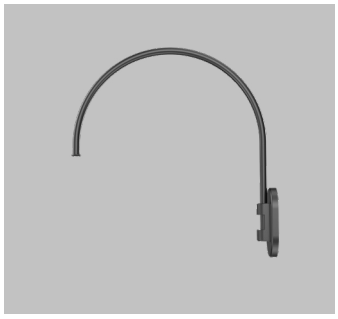

Arm GOOSE4, Black Finish
R59064
RENO-GN-GOOSE4-BK

Order #	Model	Description
R59062	RENO-GN-GOOSE2-BK	Arm GOOSE2 , Black Finish
R59063	RENO-GN-GOOSE3-BK	Arm GOOSE3 , Black Finish
R59064	RENO-GN-GOOSE4-BK	Arm GOOSE4 , Black Finish

RENO LIGHTING
All Rights Reserved © Renolighting (905) 604-4666 | sales@renolighting.com | www.renolighting.com
Reno Lighting reserves the right to change this product and related instructions without notice.
Refer to the product page for the latest information.

Dimensions

Default Shade Arm Options

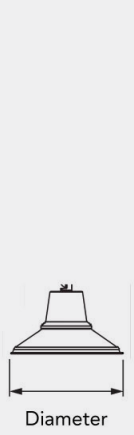

R51060 (Default Arm)

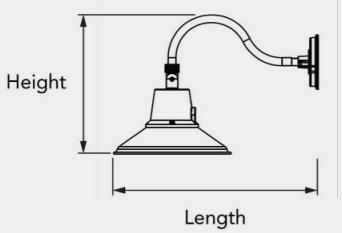

R59062 (Arm)

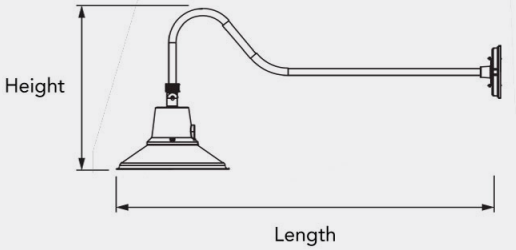

R59063 (Arm)

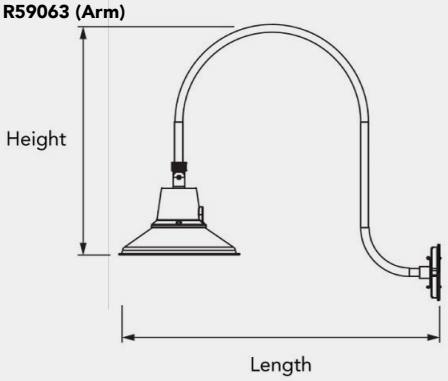

R59064 (Arm)

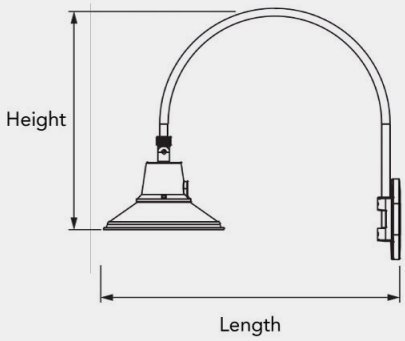

Order #	Model	Type	Length	Height	Shade Diameter
R51060	RENO-GN-MW-DV-MCCT-BK	Arm	20.6" (522.1mm)	19.9" (353.9mm)	11.85" (301.1mm)
R59062	RENO-GN-GOOSE2-BK	Arm	40.0" (1017.5mm)	9.7" (426.9mm)	11.85" (301.1mm)
R59063	RENO-GN-GOOSE3-BK	Arm	31.4" (796.5mm)	26.7" (679mm)	11.85" (301.1mm)
R59064	RENO-GN-GOOSE4-BK	Arm	29.0" (736.1mm)	24.4" (619.3mm)	11.85" (301.1mm)

RENO LIGHTING
All Rights Reserved © Renolighting (905) 604-4666 | sales@renolighting.com | www.renolighting.com
Reno Lighting reserves the right to change this product and related instructions without notice.
Refer to the product page for the latest information.

Dimensions

Angled Cone Shade Arm Options

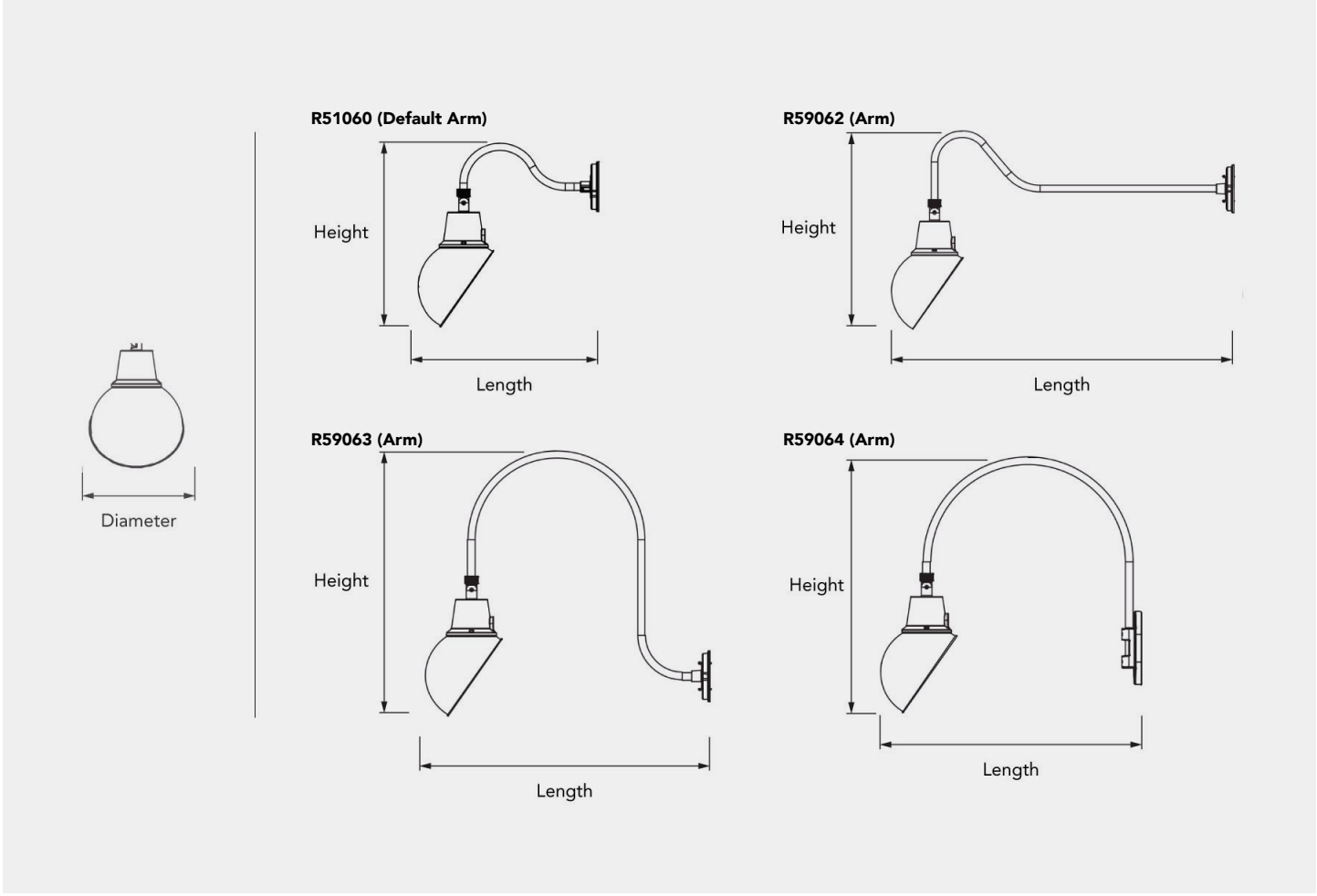

Order #	Model	Type	Length	Height	Shade Diameter
R51060	RENO-GN-MW-DV-MCCT-BK	Arm	19.5" (496.5mm)	19.9" (505.9mm)	10.13" (257.4mm)
R59062	RENO-GN-GOOSE2-BK	Arm	39.0" (991.9mm)	22.8" (578.9mm)	10.13" (257.4mm)
R59063	RENO-GN-GOOSE3-BK	Arm	28.0" (710.7mm)	28.3" (719mm)	10.13" (257.4mm)
R59064	RENO-GN-GOOSE4-BK	Arm	27.9" (709.4mm)	27.4" (696mm)	10.13" (257.4mm)
R59061	Reno-GN-ADS-BK	Shade	-	-	10.13" (257.4mm)

All Rights Reserved © Renolighting (905) 604-4666 | sales@renolighting.com | www.renolighting.com
Reno Lighting reserves the right to change this product and related instructions without notice.
Refer to the product page for the latest information.

Dimensions

Angled Dome Shade Arm Options

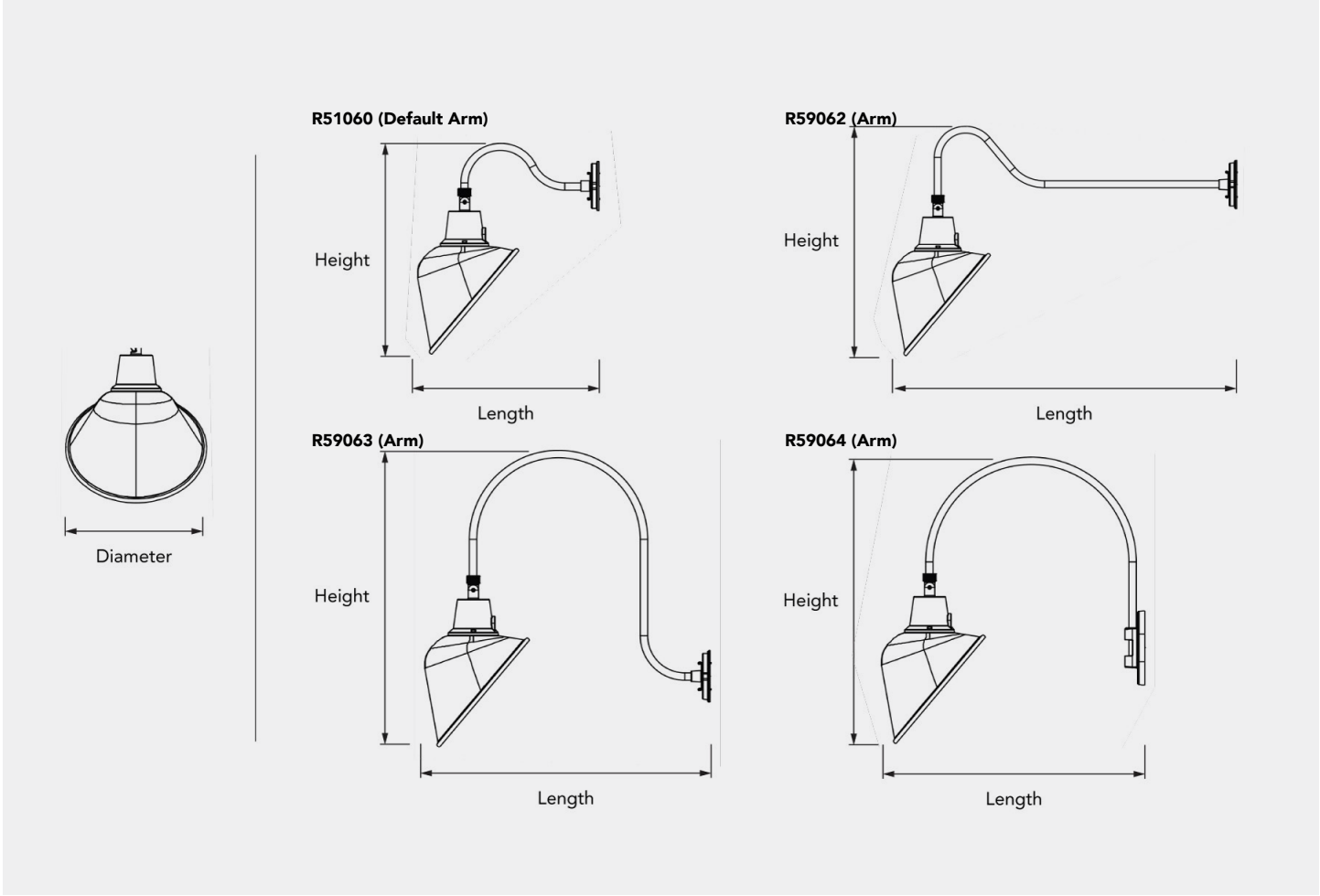

Order #	Model	Type	Length	Height	Shade Diameter
R51060	RENO-GN-MW-DV-MCCT-BK	Arm	17.8" (502.7mm)	23.1" (587.9mm)	14.96" (380mm)
R59062	RENO-GN-GOOSE2-BK	Arm	38.9" (989mm)	24.0" (661mm)	14.96" (380mm)
R59063	RENO-GN-GOOSE3-BK	Arm	30.2" (768mm)	31.5" (800.9mm)	14.96" (380mm)
R59064	RENO-GN-GOOSE4-BK	Arm	28.1" (714mm)	30.6" (778mm)	14.96" (380mm)
R59060	Reno-GN-ACS-BK	Shade	-	-	14.96" (380mm)

RENO LIGHTING
All Rights Reserved © Renolighting (905) 604-4666 | sales@renolighting.com | www.renolighting.com
Reno Lighting reserves the right to change this product and related instructions without notice.
Refer to the product page for the latest information.